JOIST DETAILS

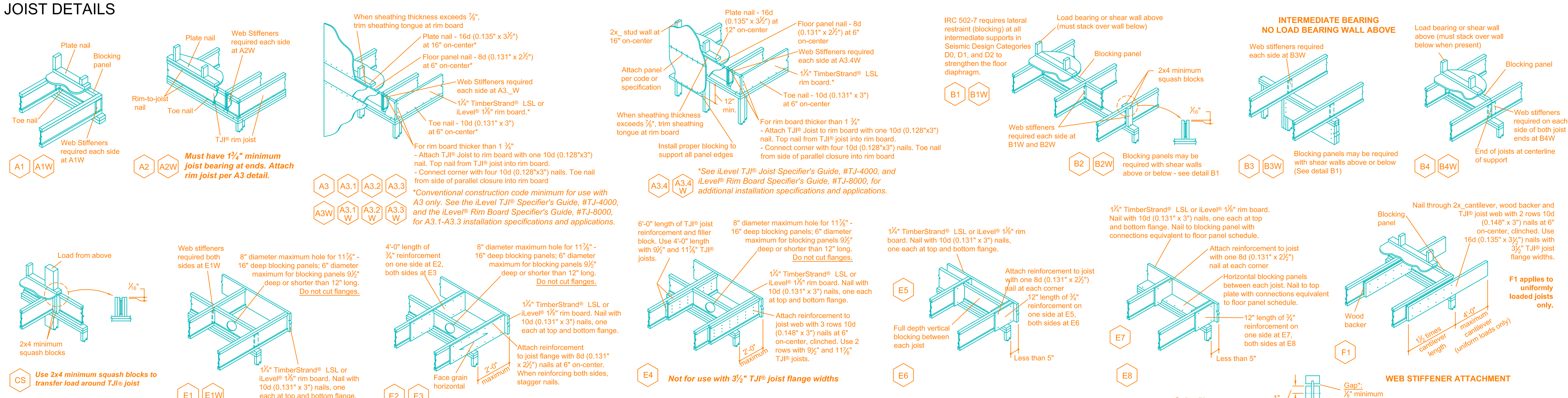

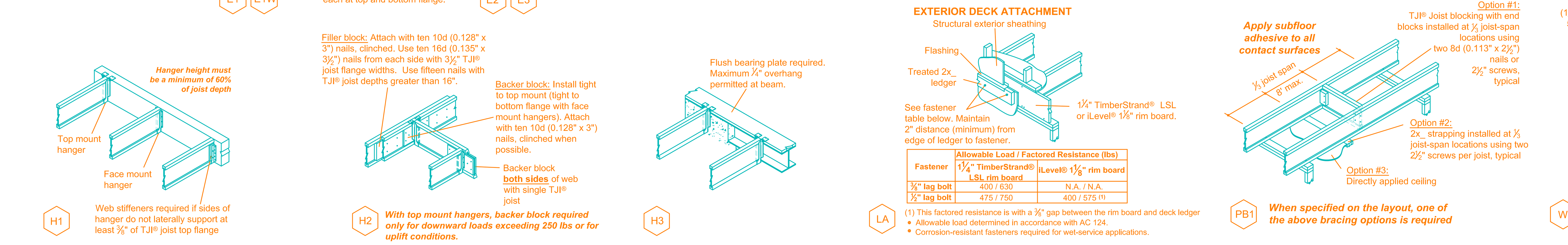

Fastener	Allowable Load / Factored Resistance (lbs) 1¼" TimberStrand® LSL rim board	iLevel® 1⅛" rim board
⅜" lag bolt	400 / 630	N.A. / N.A.
½" lag bolt	475 / 750	400 / 575 (1)

(1) This factored resistance is with a ⅜" gap between the rim board and deck ledger

- Allowable load determined in accordance with AC 124.
- Corrosion-resistant fasteners required for wet-service applications.

WEB STIFFENER ATTACHMENT

Gap*: ⅛" minimum, 2¾" maximum

1" (1½" for TJI® 560, 560D, s47 joist)

Web stiffener each side. See sizes below.

Tight fit*

* With point load from above, install web stiffener tight to top flange (gap at bottom flange) when there is no support below.

TJI Joist Series	Depth (in.)	Minimum Web Stiffener Size	Nailing Requirements Type	Number Nails End	Number Nails Intermediate
110 210 230 & 360 s31 & s33	All All All All	⅝" x 2$\frac{5}{16}$" ¾" x 2$\frac{5}{16}$" ⅞" x 2$\frac{5}{16}$" 1" x 2$\frac{5}{16}$"	8d (0.113" x 2½")	3	3
560 & s47	All	2x4	16d (0.135" x 3½")	3	3
560D	18" 20" 22" 24"	2x4	16d (0.135" x 3½")	4 5 6 6	4 5 11 13

W

BEAM and COLUMN DETAILS

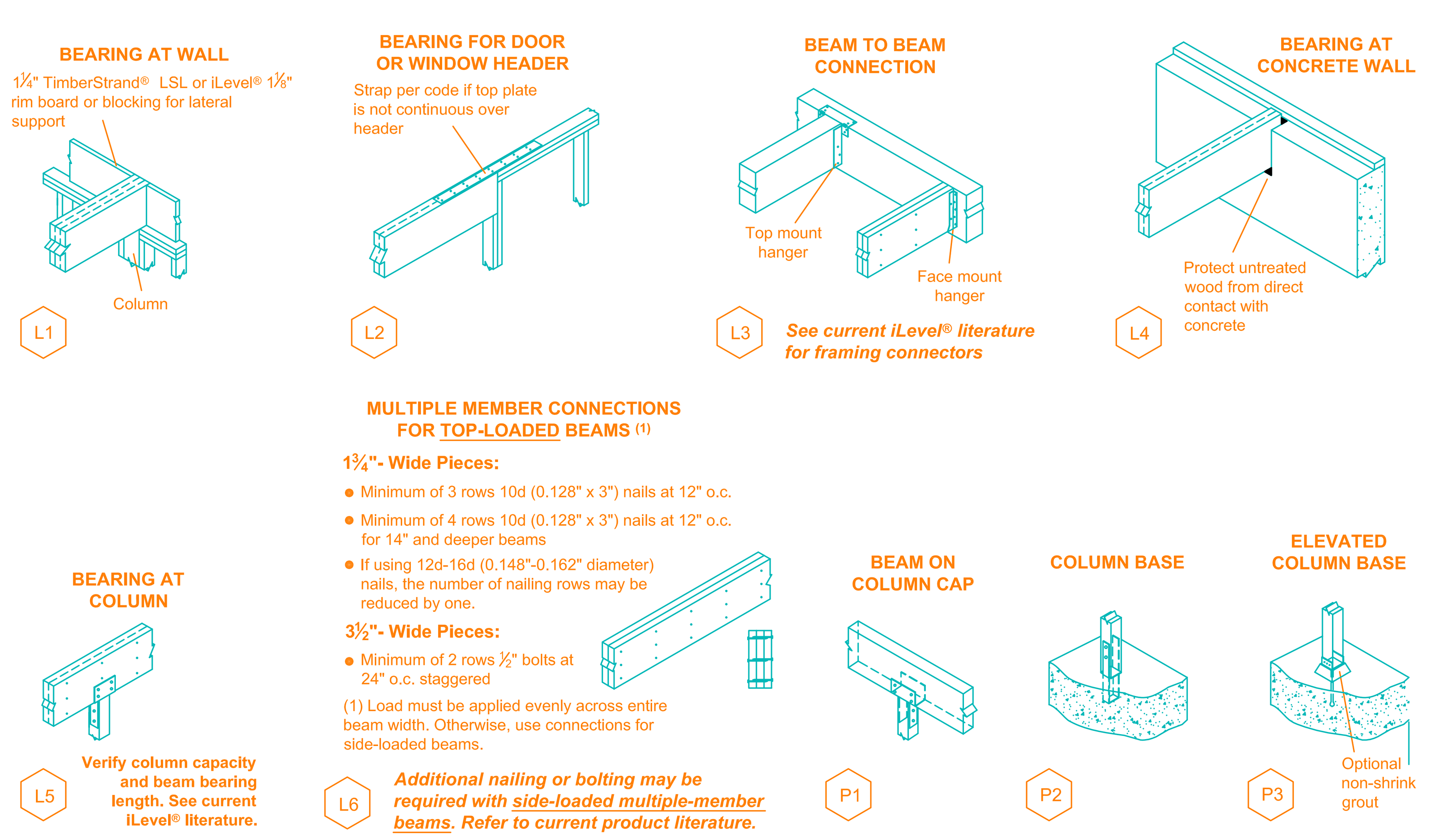

MULTIPLE MEMBER CONNECTIONS FOR TOP-LOADED BEAMS (1)

1¾"- Wide Pieces:

- Minimum of 3 rows 10d (0.128" x 3") nails at 12" o.c.
- Minimum of 4 rows 10d (0.128" x 3") nails at 12" o.c. for 14" and deeper beams
- If using 12d-16d (0.148"-0.162" diameter) nails, the number of nailing rows may be reduced by one.

3½"- Wide Pieces:

- Minimum of 2 rows ½" bolts at 24" o.c. staggered

(1) Load must be applied evenly across entire beam width. Otherwise, use connections for side-loaded beams.

L6

Additional nailing or bolting may be required with side-loaded multiple-member beams. Refer to current product literature.

FASTENING of FLOOR PANELS

Guidelines for Closest On-Center Spacing per Row

Nail Size	TJI®(1) 110, 210, and 230	TJI®(1) 360 and 560	Rim Board iLevel® 1⅛"	Rim Board 1¼" TimberStrand® LSL	1½" TimberStrand® LSL or wider	Microllam® LVL	Parallam® PSL
8d (0.131" x 2½")	4"	3"	6"	4"	3"	3"	3"
10d (0.148"x 3"), 12d (0.148"x 3¼")	4"	4"	6"	4"	4"	4"	4"
16d (0.162"x 3½")	6"	6"	16"	6"(2)	6"(2)	8"	6"

(1) One row of fasteners permitted (two at abutting panel edges) for diaphragms. Stagger nails when using 4" on-center spacing and maintain ⅜" joist and panel edge distance. For other applications, multiple rows of fasteners are permitted if the rows are offset at least ½" and staggered.

(2) Can be reduced to 4" on-center if nail penetration into the narrow edge is no more than 1 ⅜" (to avoid splitting).

- Recommended nailing is 12" on-center in field and 6" on-center along panel edge. Fastening requirements on engineered drawings supersede recommendations listed above.
- iLevel recommends using a non-polyurethane subfloor adhesive on all contact points between panels and floor framing.
- Nailing rows must be offset at least ½" and staggered.
- 14 ga. staples may be substituted for 8d (0.113" x 2½") nails if minimum penetration of 1" into the TJI® joist or rim board is achieved.
- Maximum spacing of nails is 18" on-center for TJI® joists.

FILLER and BACKER BLOCK SIZES

TJI® Joists	110		210		230 or 360			560		
Depth	9½" or 11⅞"	14"	9½" or 11⅞"	14" or 16"	9½" or 11⅞"	14" or 16"	18" or 20"	11⅞"	14" or 16"	18" or 20"
Filler Block (1) (Detail H2)	2x6	2x8	2x6 + ⅜" sheathing	2x8 + ⅜" sheathing	2x6 + ½" sheathing	2x8 + ½" sheathing	2x12 + ½" sheathing	Two 2x6	Two 2x8	Two 2x12
Cantilever Filler (Detail E4)	2x6 4'-0" long	2x10 6'-0" long	2x6 + ⅜" sheathing 4'-0" long	2x10 + ⅜" sheathing 6'-0" long	2x6 + ½" sheathing 4'-0" long	2x10 + ½" sheathing 6'-0" long	Not applicable	Not applicable		
Backer Block (1) (Detail F1 or H2)	⅝" or ¾"		¾" or ⅞"		1" Net			2x6	2x8	2x12

(1) If necessary, increase filler and backer block height for face mount hangers and maintain ⅛" gap at top of joist; see detail W. Filler and backer block lengths should accomodate required nailing without splitting (12" minimum for backer blocks and 24" minimum for filler blocks).

TJI® JOIST NAILING REQUIREMENTS at BEARING

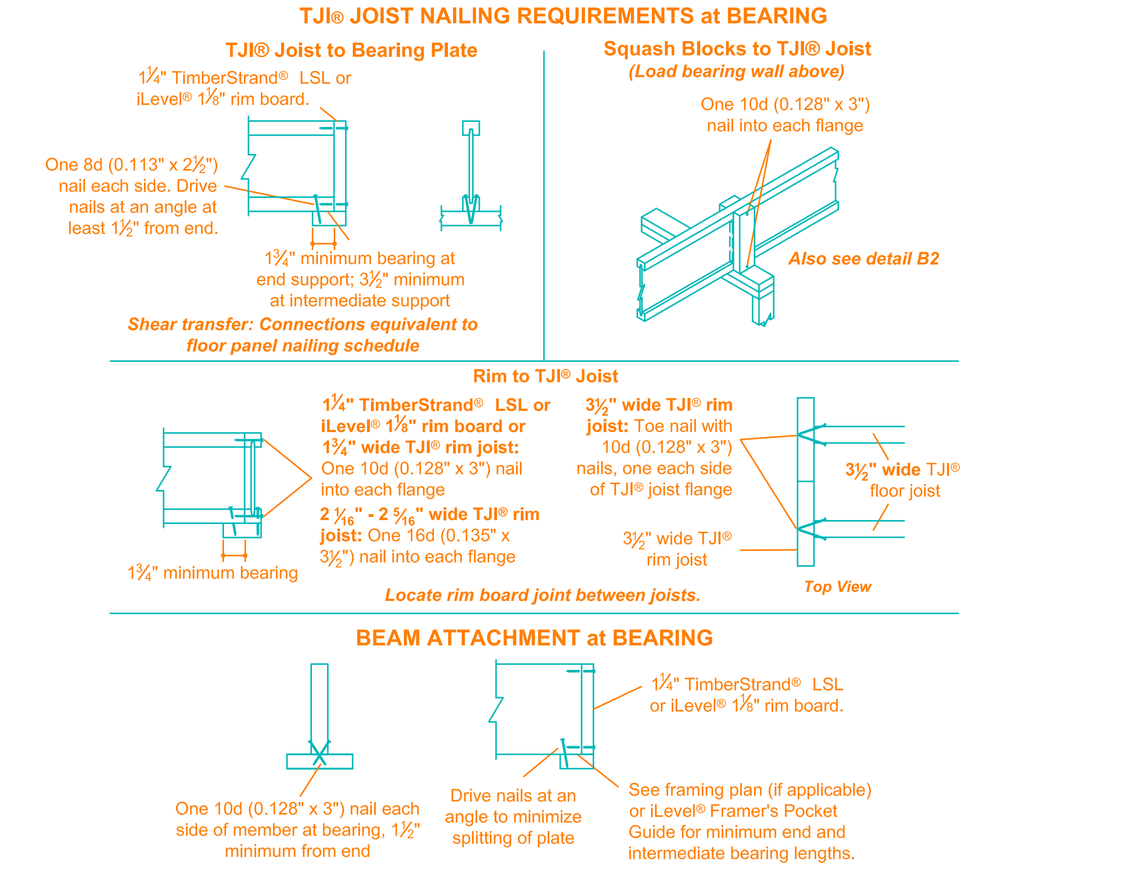

INSTALLATION TIPS

Subfloor adhesive will improve floor performance, but may not be required.

Squash blocks and blocking panels carry stacked vertical loads (details B1 and B2). Packing out the web of a TJI® joist (with web stiffeners) is not a substitute for squash blocks or blocking panels.

When joists are doubled at non-load bearing parallel partitions, space joists apart the width of the wall for plumbing or HVAC.

Additional joist at plumbing drop (see detail).

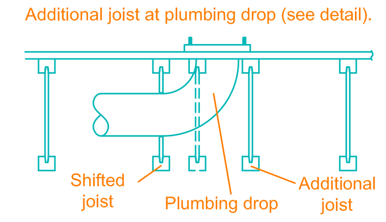

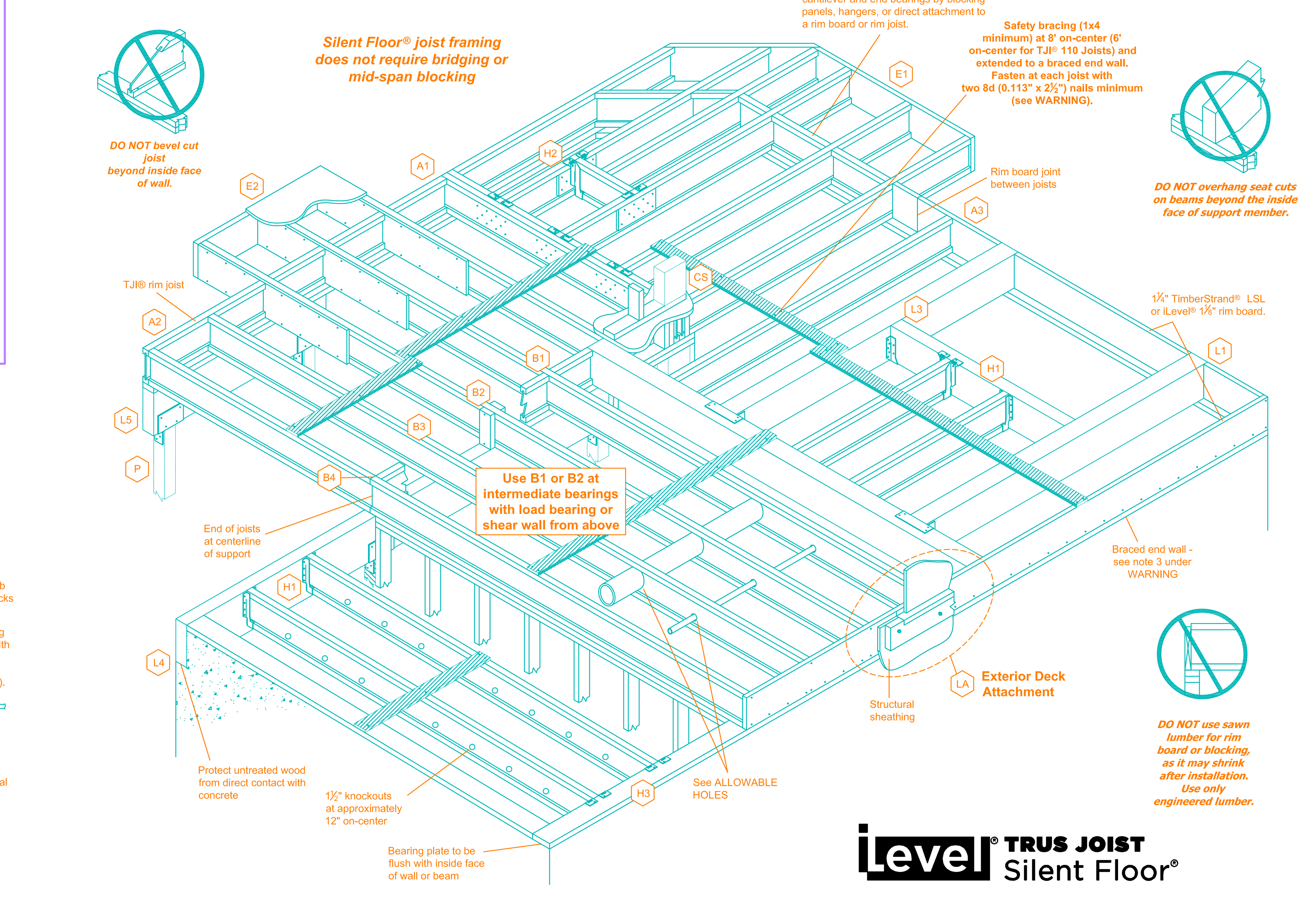

iLevel® TRUS JOIST Silent Floor®

ALLOWABLE HOLES - TJI® Joists

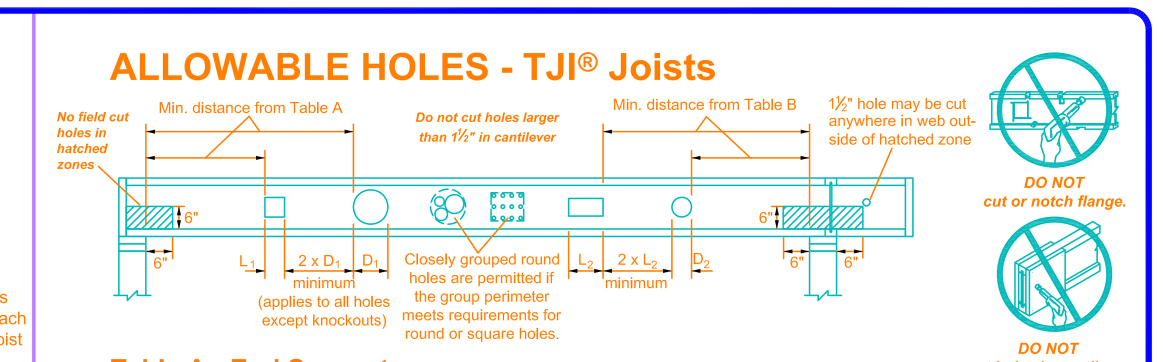

Table A - End Support

Minimum distance from edge of hole to inside face of nearest end support

JOIST DEPTH	TJI®	Round 2"	Round 3"	Round 4"	Round 5"	Round 6½"	Round 7"	Round 8⅞"	Round 11"	Round 13"	Square 2"	Square 3"	Square 4"	Square 5"	Square 6½"	Square 7"	Square 8⅞"	Square 11"	Square 13"
9½"	110	1'-6"	1'-6"	2'-0"	3'-0"	5'-0"					1'-0"	1'-6"	2'-6"	3'-6"	4'-6"				
	210	1'-6"	2'-0"	2'-6"	3'-0"	5'-6"					1'-6"	2'-0"	2'-6"	4'-0"	5'-0"				
	230	1'-6"	2'-0"	2'-6"	3'-6"	5'-6"					1'-6"	2'-0"	3'-0"	4'-6"	5'-0"				
11⅞"	110	1'-0"	1'-0"	1'-6"	2'-0"	2'-6"	3'-0"	5'-6"			1'-0"	1'-6"	2'-0"	2'-6"	4'-6"	5'-0"	6'-0"		
	210	1'-0"	1'-6"	2'-0"	2'-0"	3'-0"	3'-6"	6'-0"			1'-0"	1'-6"	2'-6"	3'-0"	5'-0"	5'-6"	6'-6"		
	230	1'-0"	1'-6"	2'-0"	2'-6"	3'-0"	3'-6"	6'-6"			1'-0"	2'-0"	2'-6"	3'-6"	5'-6"	5'-6"	7'-0"		
	360	1'-6"	2'-0"	3'-0"	3'-6"	4'-6"	5'-0"	7'-0"			1'-6"	2'-6"	3'-6"	4'-6"	6'-6"	6'-6"	7'-6"		
	560	1'-6"	2'-6"	3'-0"	4'-0"	5'-6"	6'-0"	8'-0"			2'-6"	3'-6"	4'-6"	5'-6"	7'-0"	7'-6"	8'-0"		
14"	110	1'-0"	1'-0"	1'-0"	1'-0"	1'-6"	2'-0"	3'-0"	5'-6"		1'-0"	1'-0"	1'-6"	2'-0"	3'-6"	4'-0"	6'-0"	8'-0"	
	210	1'-0"	1'-0"	1'-0"	1'-6"	2'-0"	2'-6"	3'-6"	6'-0"		1'-0"	1'-0"	2'-0"	2'-6"	4'-0"	4'-6"	6'-6"	8'-6"	
	230	1'-0"	1'-0"	1'-0"	1'-6"	2'-6"	2'-6"	4'-0"	7'-0"		1'-0"	1'-0"	2'-0"	3'-0"	4'-0"	5'-0"	7'-0"	9'-0"	
	360	1'-0"	1'-0"	1'-6"	2'-6"	3'-6"	4'-0"	5'-6"	8'-0"		1'-0"	1'-6"	2'-6"	4'-0"	6'-0"	6'-6"	8'-0"	9'-6"	
	560	1'-0"	1'-0"	2'-0"	3'-0"	4'-6"	5'-0"	6'-6"	9'-0"		1'-6"	3'-0"	4'-0"	5'-0"	7'-0"	7'-6"	9'-0"	10'-0"	
16"	210	1'-0"	1'-0"	1'-0"	1'-0"	1'-0"	1'-6"	2'-6"	3'-6"	6'-0"	1'-0"	1'-0"	1'-0"	2'-0"	3'-0"	3'-6"	6'-6"	8'-0"	11'-0"
	230	1'-0"	1'-0"	1'-0"	1'-0"	1'-6"	1'-6"	3'-0"	4'-0"	7'-0"	1'-0"	1'-0"	1'-0"	2'-0"	3'-6"	4'-0"	7'-0"	9'-0"	11'-0"
	360	1'-0"	1'-0"	1'-0"	1'-0"	2'-6"	2'-6"	4'-6"	6'-6"	9'-0"	1'-0"	1'-0"	1'-6"	3'-0"	5'-0"	5'-6"	9'-0"	10'-0"	11'-6"
	560	1'-0"	1'-0"	1'-0"	1'-0"	2'-6"	3'-0"	5'-0"	7'-6"	10'-0"	1'-0"	2'-0"	3'-0"	4'-6"	6'-6"	7'-0"	10'-0"	11'-0"	12'-0"

JOIST DEPTH	TJI®	Round 4"	Round 5"	Round 6"	Round 7"	Round 8"	Round 10"	Round 12"	Round 15"	Round 17"	Square 4"	Square 5"	Square 6"	Square 7"	Square 8"	Square 10"	Square 12"	Square 15"	Square 17"
18"	360	1'-0"	1'-0"	1'-0"	1'-0"	1'-0"	2'-0"	5'-0"	10'-0"		1'-0"	1'-0"	1'-0"	3'-0"	5'-0"	10'-0"	11'-0"	13'-6"	
	560	1'-0"	1'-0"	1'-0"	1'-0"	1'-0"	1'-0"	5'-0"	11'-0"		1'-0"	1'-0"	1'-6"	4'-0"	6'-6"	11'-0"	12'-0"	14'-6"	
20"	360	1'-0"	1'-0"	1'-0"	1'-0"	1'-0"	1'-0"	2'-0"	7'-0"	10'-6"	1'-0"	1'-0"	1'-0"	1'-0"	2'-6"	8'-0"	11'-6"	14'-0"	15'-6"
	560	1'-0"	1'-0"	1'-0"	1'-0"	1'-0"	1'-0"	1'-0"	7'-0"	11'-0"	1'-0"	1'-0"	1'-0"	1'-0"	4'-0"	9'-6"	12'-6'	14'-6"	15'-6"

Table B - Intermediate or Cantilever Support

Minimum distance from edge of hole to inside face of nearest intermediate or cantilever support

JOIST DEPTH	TJI®	Round 2"	Round 3"	Round 4"	Round 5"	Round 6½"	Round 7"	Round 8⅞"	Round 11"	Round 13"	Square 2"	Square 3"	Square 4"	Square 5"	Square 6½"	Square 7"	Square 8⅞"	Square 11"	Square 13"
9½"	110	2'-0"	2'-6"	3'-6"	4'-6"	7'-6"					1'-6"	2'-6"	3'-6"	5'-6"	6'-6"				
	210	2'-0"	2'-6"	3'-6"	5'-0"	8'-0"					2'-0"	3'-0"	4'-0"	6'-6"	7'-6"				
	230	2'-6"	3'-0"	4'-0"	5'-6"	8'-6					2'-0"	3'-6"	4'-6"	6'-6"	7'-6"				
11⅞"	110	1'-0"	1'-0"	1'-6"	2'-6"	4'-0"	4'-6"	8'-6"			1'-0"	1'-6"	2'-6"	4'-0"	7'-0"	7'-0"	9'-6"		
	210	1'-0"	1'-0"	2'-0"	3'-0"	4'-6"	5'-0"	9'-0"			1'-0"	2'-0"	3'-0"	4'-6"	8'-0"	8'-0"	10'-0"		
	230	1'-0"	2'-0"	2'-6"	3'-6"	5'-0"	5'-6"	10'-0"			1'-0"	2'-6"	3'-6"	5'-0"	8'-6"	9'-0"	10'-6"		
	360	2'-0"	3'-0"	4'-0"	5'-6"	7'-0"	7'-6"	11'-0"			2'-0"	3'-6"	5'-0"	7'-0"	9'-6"	9'-6"	11'-0"		
	560	1'-6"	3'-0"	4'-6"	5'-6"	8'-0"	8'-6"	12'-0"			3'-0"	4'-6"	6'-0"	8'-0"	10'-6"	11'-0"	12'-0"		
14"	110	1'-0"	1'-0"	1'-0"	1'-0"	2'-0"	2'-6"	4'-6"	8'-6"		1'-0"	1'-0"	1'-0"	2'-6"	5'-0"	6'-0"	9'-0"	12'-0"	
	210	1'-0"	1'-0"	1'-0"	1'-0"	2'-6"	3'-0"	5'-6"	9'-6"		1'-0"	1'-0"	2'-0"	3'-6"	6'-0"	7'-0"	10'-0"	13'-0"	
	230	1'-0"	1'-0"	1'-0"	2'-0"	3'-6"	4'-0"	6'-0"	10'-6"		1'-0"	1'-0"	2'-6"	4'-0"	6'-6"	7'-6"	11'-0"	13'-6"	
	360	1'-0"	1'-0"	2'-0"	3'-6"	5'-6"	6'-0"	8'-6"	12'-6"		1'-0"	2'-0"	4'-0"	5'-6"	9'-0"	10'-0"	12'-0"	14'-0"	
	560	1'-0"	1'-0"	1'-6"	3'-6"	5'-6"	6'-6"	9'-6"	13'-6"		1'-0"	3'-0"	5'-0"	7'-0"	10'-0"	11'-0"	13'-6"	15'-0"	
16"	210	1'-0"	1'-0"	1'-0"	1'-0"	1'-0"	1'-0"	3'-6"	6'-0"	10'-0"	1'-0"	1'-0"	1'-0"	1'-6"	4'-6"	5'-6"	10'-0"	12'-6"	16'-0"
	230	1'-0"	1'-0"	1'-0"	1'-0"	1'-6"	2'-0"	4'-0"	6'-6"	11'-0"	1'-0"	1'-0"	1'-0"	2'-6"	5'-0"	6'-0"	10'-6"	13'-6"	16'-6"
	360	1'-0"	1'-0"	1'-0"	1'-0"	3'-0"	4'-0"	6'-6"	10'-0"	13'-6"	1'-0"	1'-0"	2'-0"	4'-0"	7'-6"	8'-6"	13'-0"	14'-6"	17'-0"
	560	1'-0"	1'-0"	1'-0"	1'-0"	2'-6"	3'-6"	7'-0"	11'-0"	15'-0"	1'-0"	1'-0"	3'-6"	5'-6"	9'-0"	10'-0"	14'-6"	16'-0"	18'-0"

JOIST DEPTH	TJI®	Round 4"	Round 5"	Round 6"	Round 7"	Round 8"	Round 10"	Round 12"	Round 15"	Round 17"	Square 4"	Square 5"	Square 6"	Square 7"	Square 8"	Square 10"	Square 12"	Square 15"	Square 17"
18"	360	1'-0"	1'-0"	1'-0"	1'-6"	3'-0"	6'-0"	9'-0"	15'-0"		1'-0"	1'-6"	4'-0"	6'-6"	9'-0"	14'-6"	16'-6"	19'-6"	
	560	1'-0"	1'-0"	1'-0"	1'-0"	2'-0"	6'-0"	10'-0"	16'-6"		1'-0"	3'-6"	6'-0"	8'-6"	11'-6"	16'-6"	18'-0"	20'-0"	
20"	360	1'-0"	1'-0"	1'-0"	1'-0"	1'-0"	3'-0"	6'-0"	11'-0"	15'-6"	1'-0"	1'-0"	1'-6"	4'-0"	7'-0"	12'-6"	16'-6"	19'-0"	21'-0"
	560	1'-0"	1'-0"	1'-0"	1'-0"	1'-0"	1'-6"	5'-6"	12'-0"	16'-0"	1'-0"	1'-0"	3'-0"	6'-0"	8'-6"	14'-0"	17'-6'	19'-6"	20'-6"

Rectangular holes based on measurement of longest side.

- Holes may be located vertically anywhere within the web. Leave ⅛" of web (minimum) at top and bottom of hole.
- Knockouts are located in web at approximately 12" on-center; they do not affect hole placement.
- For simple span (5' minimum), uniformly loaded joists used in residential applications, one maximum size round hole may be located at the center of the joist span **provided that no other holes occur in the joist.**
- Distances are based on the maximum uniform loads from current iLevel specifier's guides. For other load conditions or hole configurations use iLevel® TJ-Beam® software or contact your iLevel representative.

ALLOWABLE HOLES - Headers and Beams

1.55E TimberStrand® LSL Headers and Beams

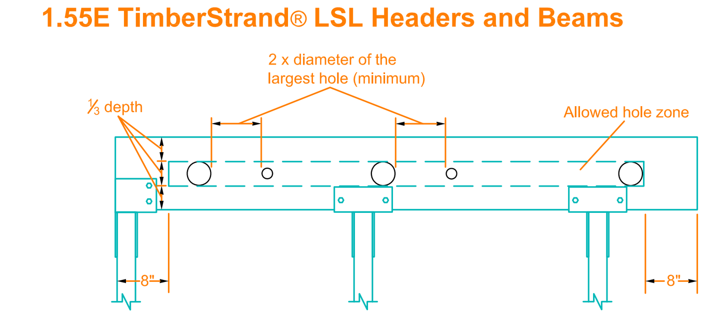

Header or Beam Depth	Maximum Round Hole Size
9¼"-9½"	3"
11¼"-11⅞"	3⅝"
14"-16"	4⅝"

See illustration for allowed hole zone

General Notes

- Allowed hole zone suitable for headers and beams with **uniform and/or concentrated loads.**
- Round holes only
- No holes in headers or beams in plank orientation.

Other iLevel® Trus Joist® Headers and Beams

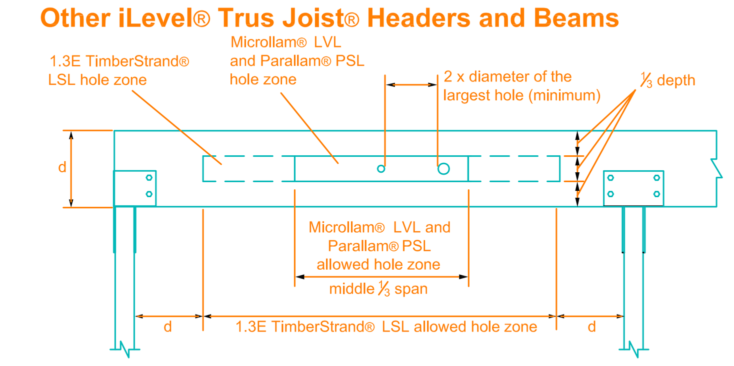

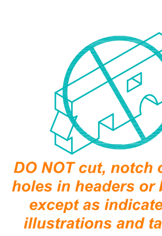

Header or Beam Depth	Maximum Round Hole Size
4⅜"	1"
5½"	1¾"
7¼"- 20"	2"

See Illustration for Allowed Hole Zone

General Notes

- Allowed hole zone suitable for headers and beams with **uniform loads only.**
- Round holes only
- No holes in cantilevers.
- No holes in headers or beams in plank orientation.

WARNING

Joists are unstable until braced laterally

Bracing Includes:

- Blocking
- Hangers
- Sheathing
- Rim Board
- Strut Lines
- Rim Joist

WARNING NOTES:

Lack of proper bracing during construction can result in serious accidents. Observe the following guidelines:

1. All blocking, hangers, rim boards and rim joists at the end supports of the TJI® joists must be completely installed and properly nailed.
2. Establish a permanent deck (sheathing), fastened to the first 4 feet of joists at the end of the bay or braced end wall.
3. Safety bracing of 1x4 (minimum) must be nailed to a braced end wall or sheathed area and to each joist.
4. Sheathing must be completely attached to each TJI® joist before additional loads can be placed on the system.
5. Ends of cantilevers require safety bracing on both the top and bottom flanges.
6. The flanges must remain straight within 1/2" from true alignment.

Warning: Drilling, sawing, sanding or machining wood products generates wood dust, a substance known to the state of California to cause cancer. For more information on Proposition 65, visit www.wy.com/inform.

SUSTAINABLE FORESTRY INITIATIVE Certified Fiber Sourcing www.sfiprogram.org

Weyerhaeuser, iLevel, Microllam, Parallam, Silent Floor, TimberStrand, TJI, and Trus Joist are registered trademarks of Weyerhaeuser NR. © 2011 Weyerhaeuser NR Company. All rights reserved. Printed in the USA.

May 2011 Reorder TJ-4015

iLevel® by Weyerhaeuser
2910 East Amity Road, Boise, ID 83716
P.O. Box 8449
Boise, ID 83707-2449
1.888.iLevel8 (1.888.453.8358)
www.iLevel.com

REV	BY	DATE	COMMENT

PROJECT #:

SERVICE #:

SHEET _ of _